TOWN OF WARNER PLANNING BOARD
P.O. Box 265
Warner, New Hampshire 03278-0059
Telephone: (603) 456-2298, ext. 7
Fax: (603) 456-2297

APPLICATION FOR CONCEPTUAL CONSULTATION

Please note that this application is subject to NH RSA 91-A which affords the public access to this information.

ACTION NEEDED FROM THE ZONING BOARD OF ADJUSTMENT? YES_____ NO_____

TODAY'S DATE: 10/6/26

NAME OF APPLICANT: Bill + Kim Morgan

ADDRESS: 137 Meson Hill Rd. Warner NH 03278

PHONE # 1: 456 3725 **PHONE # 2:** _____ **E-MAIL:** _____

OWNER(S) OF PROPERTY: Bill & Kim Morgan

ADDRESS: 137 Meson Hill Rd Warner NH 03278

PHONE # 1: 456 3725 **PHONE # 2:** _____ **E-MAIL:** _____

AGENT NAME: _____

ADDRESS: _____

PHONE # 1: _____ **PHONE # 2:** _____ **E-MAIL:** _____

STREET ADDRESS & DESCRIPTION OF PROPERTY: 137 Meson Hill Rd Warner

MAP # 15 **LOT #** 42-42-1 **ZONING DISTRICT:** R-3 **NUMBER OF LOTS/UNITS:** 4

FRONTAGE ON WHAT STREET(S): Meson Hill Rd., Couchtown Rd., Cull Trace

DEVELOPMENT AREAS: _____ **acres/sq.ft.** **BUILDING/ADDITION:** _____ **sq. ft.**

PROPOSED USE: Residential

DETAILS OF REQUEST: *Indicate number of separate pages attached, if necessary.*

Authorization/Certification from Property Owner(s)

I (We) hereby designate TBD to serve as my agent and to appear and present said application before the Warner Planning Board

By submitting this application I (We) hereby authorize and understand that agents of the Town may visit the site without further notice.

Signature of Property Owner(s): William B Morgan Date: 10/6/26
(Need signatures of all owner's listed on deed)

Kimberly Morgan

Print Names William B Morgan, Kimberly Morgan

Signature of Applicant(s) if different from Owner:

Date:

Print Names

For Planning Board Use Only

Date Received at Town Office: 10/7/26

Received By: Margaret Bastien

Date of Review: Date of Hearing:

19

Bagley Pond

WEBSTER

Mud Pond

Brook

Mud Pond

Frazier

Brook

14

11

P/O 14-50

P/O 11-51

THIS MAP IS FOR ASSESSMENT PURPOSES. IT IS NOT VALID FOR LEGAL DESCRIPTION OR CONVEYANCE.

THE HORIZONTAL DATUM IS THE NEW HAMPSHIRE STATE PLANE COORDINATE SYSTEM, NAD 83.

ORIGINAL MAPPING BY JAMES W. SEWALL COMPANY, OLD TOWN, MAINE.

REVISED & REPRINTED BY

CAI Technologies

Precision Mapping. Geospatial Solutions

LEGEND

PARCEL NUMBER 23

RECORDED DIMENSION 100'

MATCH LINE M-L

WATER

SUBDIVISION LOT NO 7

RIGHT OF WAY/ACCESS ROW

COMMON OWNERSHIP OR

WETLANDS

FEET 400 200 0 400 800 1200

METERS 100 50 0 100 200 300

SCALE: 1" = 400'

REVISED TO: APRIL 1, 2024

PROPERTY MAPS

WARNER

NEW HAMPSHIRE

INDEX DIAGRAM

MAP NO.

15

234640 94 NOV -7 PM 12:15 BK 1973 PG 1055

$1,120.00

WARRANTY DEED

I, Imogene W. Koppana, unmarried, of Warner, Merrimack County, New Hampshire, for consideration paid, grant to William B. Morgan and Kimberly A. Morgan, husband and wife, of Main Street, Warner, New Hampshire 03278, as joint tenants with rights of survivorship, with WARRANTY COVENANTS, the following:

The following tract of land with all the buildings thereon, situated in the easterly part of Warner, County of Merrimack, and State of New Hampshire, it being a part of the Isaac O. Flanders place, so-called, and bounded and described as follows:

Beginning at the intersection of the road leading from Burnt Hill to Couchtown, with the old Lull Road, so-called; thence easterly by said Couchtown Road about fifty rods to a row of maple trees; thence northerly to a wall; thence easterly by said wall to Mill Brook; thence northerly by said brook to land of Lillian A. Sherman; thence westerly by said Sherman's land to the Lull Road; thence southerly by said Lull Road to the point of beginning. Containing about twenty acres, be the same more or less.

Reserving and excepting easement rights conveyed in a deed of Imogene Aldrich White to Public Service Company of New Hampshire dated June 10, 1949, recorded at Book 651, Page 246, in the Merrimack County Registry of Deeds, as the same may apply.

~~Also, subject to any outstanding mortgages, if any there be, on the premises.~~ Darwin E. Elstein per Power of attorney dated 10/27/94.

For title reference see the deed of Francis B. White dated March 3, 1959, and recorded at Book 837, Page 490 in the Merrimack County Registry of Deeds. Imogene Aldrich White was my grandmother. She died in Massachusetts on April 28, 1955. Francis Bingham White, Jr. was her son, as well as being my father. Francis Bingham White, Jr., who was named as a grantee in a deed of Imogene Aldrich White, recorded at Book 749, Page 97, in said registry of deeds, is the same person as the grantor in the deeds recorded at Book 837, Page 490, and Book 841, Page 324. See the death certificate of Francis B. White recorded at Book 1847, Page 1728.

The premises are not the homestead of anyone.

Executed this 10/27 day of October, 1994.

Imogene W. Koppana

Imogene W. Koppana

HARD R. PEPPE
ORNEY AT LAW
COOK, NH 03275

OK

PUBLIC RECORD

STATE OF NEW HAMPSHIRE
COUNTY OF MERRIMACK

On this 11th day of October, 1994, before me the undersigned officer, personally appeared Imogene W. Koppana known to me (or satisfactorily proven) to be the person whose name is subscribed to the within instrument and acknowledged that she executed the same for the purposes therein contained.

Justice of the Peace/~~Notary Public~~

My commission expires: 3-17-98

STATE OF NEW HAMPSHIRE
DEPARTMENT OF REVENUE ADMINISTRATION
REAL ESTATE TRANSFER TAX
#1 THOUSAND 1 HUNDRED AND 20 DOLLARS
MO. | DAY | YR. | AMOUNT
11/07/1994 | 151329 | $ #1120.00
VOID IF ALTERED

PUBLIC RECORD

MERRIMACK COUNTY RECORDS
Katie L. Lucy, Register

HARD R. PEPPE
ORNEY AT LAW
COOK, NH 03275

238072 95 JAN -9 AM 8:44 BK1978 PG0923

$200.00

WARRANTY DEED

I, Imogene W. Koppana, unmarried, of Warner, Merrimack County, New Hampshire, for consideration paid, grant to William B. Morgan and Kimberly A. Morgan, husband and wife, of Main Street, Warner, Merrimack County, New Hampshire 03278; as joint tenants with rights of survivorship, with WARRANTY COVENANTS, the following:

A certain tract of land with the buildings thereon, if any, located in Warner, County of Merrimack, and State of New Hampshire, bounded and described as follows:

Beginning at a line of maple trees which now separate the land of E. G. Aldrich and J. A. White from land owned by F. B. White, thence easterly along the road from Burnt Hill to Couchtown, thence northerly by said road and land owned by A. J. Hook, thence westerly by land of N. C. Sargent, to the land owned by said E. G. Aldrich and J. A. White, thence southerly to point of beginning.

For title reference see deed of Francis Bingham White to Edward Gurdon Aldrich dated December 17, 1912, and recorded at Book 409, Page 347 in the Merrimack County Registry of Deeds. Also, see the affidavit of the grantor of near or even date.

The said property is not anyone's homestead.

Executed this 16 day of November, 1994

Imogene W. Koppana

STATE OF ~~NEW HAMPSHIRE~~ Virginia
COUNTY OF ~~MERRIMACK~~ Williamsburg

On this 16 day of November, 1994, before me the undersigned officer, personally appeared Imogene W. Koppana known to me (or satisfactorily proven) to be the person whose name is subscribed to the within instrument and acknowledged that she executed the same for the purposes therein contained.

Ashly S. Pane
Justice of the Peace/Notary Public

My commission expires: 11/30/96

STATE OF NEW HAMPSHIRE
DEPARTMENT OF REVENUE ADMINISTRATION
REAL ESTATE TRANSFER TAX
***** THOUSAND 2 HUNDRED AND 00 DOLLARS
MO. DAY YR. AMOUNT
01/09/1995 159021 $ *****200.00
VOID IF ALTERED

MERRIMACK COUNTY RECORDS
Kathi L. Lacy, Register

RICHARD R. PEPPE
ATTORNEY AT LAW
SUNCOOK, NH 03275

PUBLIC RECORD

201600018376 Recorded in Merrimack County, NH In the Records of Kathi L. Guay,CPO, Register
BK: 3532 PG: 2149, 10/5/2016 11:06 AM RECORDING $18.00 SURCHARGE $2.00

MERRIMACK COUNTY RECORDS Kathi L. Guay CPO, Register

Return to
Town of Warner
P.O. Box 264
Warner, N.H. 03278

TOWN OF WARNER, NEW HAMPSHIRE
APPLICATION FOR RESTORATION OF INVOLUNTARILY MERGED LOTS
PLEASE TYPE

19 47
2 21

Date 9/20/16

Property Owner (s) Name William + Kimberly Morgan

Address 137 Mason Hill Rd.
Warner NH 03278

Telephone # 456 3725
Email Address
Parcel to be unmerged Map 15 **Lot** 42

Deeds : List the book and page for all deeds, combined and separated.

Book 1973 **Page** 1055

Book 1978 **Page** 923

Book _____ **Page** _____

Are all taxes paid to date? Yes
Date of when you believe the involuntary merger took place. _____

Approval by the Mortgagee

None

Name of Mortgage Holder

Signature of Officer or agent for Mortgagee **Title** **Date**

By signing above, the mortgagee signifies that they do approve and are duly notified that upon approval of this application by the local assessing officials the legal description of the property would change.

form 05/22/12

PUBLIC RECORD

OWNER INFORMATION

MORGAN, WILLIAM & KIMBERLY

137 MASON HILL ROAD

WARNER, NH 03278

SALES HISTORY

Date	Book	Page	Type	Price	Grantor

PICTURE

LISTING HISTORY

09/12/25	LMHC	
05/05/25	RDCL	
09/27/24	KOVM	
04/01/20	DM	APPRAISER
12/12/14	NTRL	DATA COLLECTION

NOTES

9/24 UP UNHEAT,NO ELEC SOME OF RMS;RAD HEAT ON FF;WB/DB;SHINGLES FALLING OFF HSE;LEAKS ARND CHIM;4 FPL INOP;WDSTV PRIM HT SOURCE;5/25 VU'D INT W/HO (MR);KIT=FORM,WD CAB MISS CEIL;BDRM=3, 4TH GUTTED,NO CLST,HEAT,INS OR ELEC;2 FULL BTH=6FIX,1 BTH INOP;MST BTH VAN NOT HOOKED UP;TUB/SHWR CMBO TILE ARND TORN OUT;PINE FLRS MISSING IN AREAS;CORR BMU & UNFIN AREAS;BM WET, FLR JOIST CRUMBLING;2 FPL, 1 DET FR CHIM,OTHR CLOSED W/DRYWALL;WDSTV W/BRCK HEARTH DR;SEV AREAS MISSING HEAT/INS OR ELEC;FCFA;

EXTRA FEATURES VALUATION

Feature Type	Units	Lngth x Width	Size Adj	Rate	Cond	Market Value	Notes
SHED-WOOD	54	6 x 9	356	17.00	40	1,307	
SHED-EQUIPMENT	396	18 x 22	100	11.00	60	2,614	
FIREPLACE 1-STAND	2		100	5,500.00	20	2,200	BOTH INOP
LEAN-TO	60	6 x 10	327	4.00	20	157	EST
						6,300	

MUNICIPAL SOFTWARE BY AVITAR

WARNER ASSESSING OFFICE

PARCEL TOTAL TAXABLE VALUE

Year	Building	Features	Land
2024	$ 107,940	$ 0	$ 69,410
		Parcel Total:	$ 177,350
2025	$ 206,500	$ 6,300	$ 153,053
		Parcel Total:	$ 365,853
2026	**$ 206,500**	**$ 6,300**	**$ 153,001**
		Parcel Total:	**$ 365,801**

LAND VALUATION

LAST REVALUATION: 2025

Zone: R3 - LOW DENSITY **Minimum Acreage:** 3.00 **Minimum Frontage:** 250 **Site:** AVERAGE **Driveway:** GRAVEL/DIRT **Road:** GRAVEL/DIRT

Land Type	Units	Base Rate	NC	Adj	Site	Road	DWay	Topography	Cond	Ad Valorem	SPI	R	Tax Value	Notes
1F RES WTRFRNT	1.950 ac	159,375	F	110	100	95	95	95 -- MILD	100	150,300	0	N	150,300	
UNMNGD PINE	3.000 ac	x 2,500	X	91				95 -- MILD	100	6,500	100	N	601	
UNMNGD HARDWD	20.050 ac	x 2,500	X	91				85 -- MODERATE	100	38,800	100	N	2,100	
FRAZIER BROOK IN CU	10.000 wf	NATURAL, MAIN BODY						95 -- MILD	100	22,700	0		0	
	25.000 ac									218,300			**153,001**	

PICTURE



OWNER

MORGAN, WILLIAM & KIMBERLY

137 MASON HILL ROAD

WARNER, NH 03278

TAXABLE DISTRICTS

District	Percentage

PERMITS

Date	Permit ID	Permit Type	Notes

BUILDING DETAILS

Model: **2.5 STORY FRAME COLONIAL**
Roof: **GABLE OR HIP/ASPHALT**
Ext: **CLAP BOARD**
Int: **DRYWALL/PLASTER**
Floor: **PINE/SOFT WD**
Heat: **OIL/RAD WATER**
Bedrooms: **3** Baths: **2.0** Fixtures: **6**
Extra Kitchens: Fireplaces:
A/C: **No** Generators:
Quality: **A2 AVG+20**
Com. Wall:
Size Adj: **0.9468** Base Rate: **RSA 160.00**
Bldg. Rate: **1.0580**
Sq. Foot Cost: **$ 169.28**

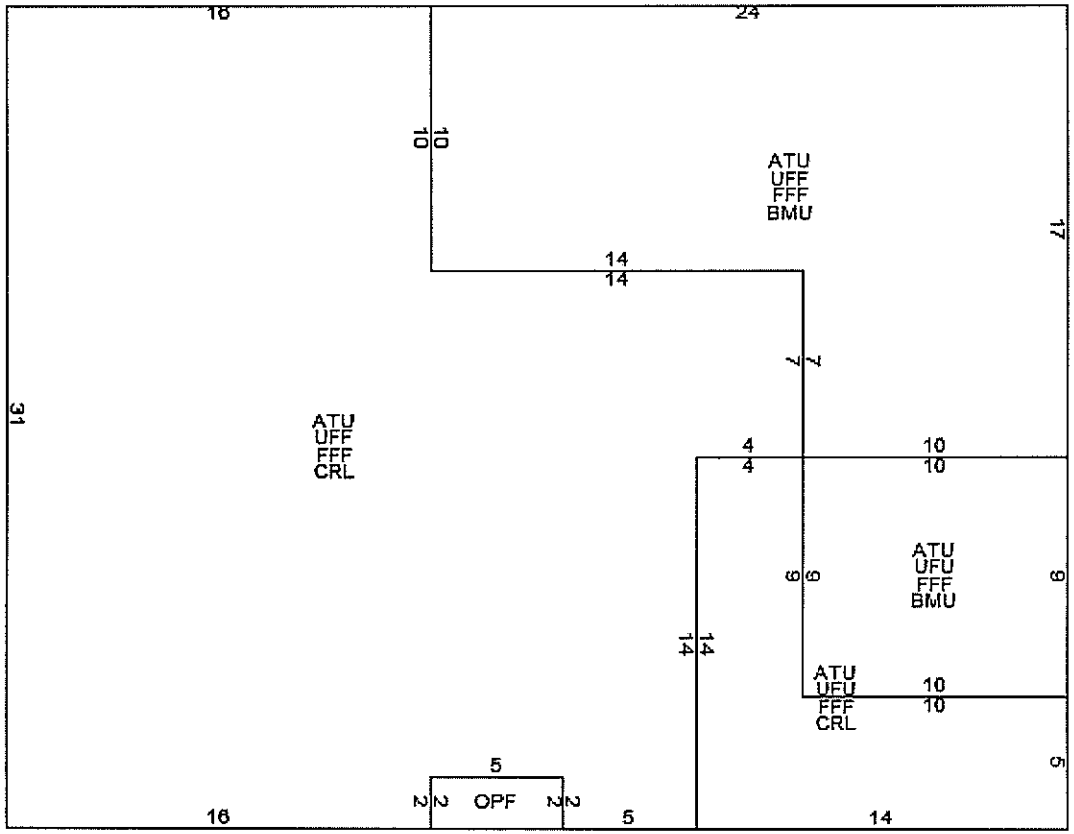

BUILDING SUB AREA DETAILS

ID	Description	Area	Adj.	Effect.
UFF	UPPER FLR FIN	1034	1.00	1034
FFF	FST FLR FIN	1230	1.00	1230
CRL	CRAWL SPACE	830	0.05	42
BMU	BSMNT	400	0.15	60
OPF	OPEN PORCH	10	0.25	3
ATU	ATTIC	1230	0.10	123
UFU	UPPER FLR	196	0.25	49
GLA:	**2,264**	**4,930**		**2,541**

2025 BASE YEAR BUILDING VALUATION

Market Cost New:		**$ 430,140**
Year Built:		**1803**
Condition For Age:	FAIR	**50 %**
Physical:		
Functional:	WB/DB	**2 %**
Economic:		
Temporary:		
Total Depreciation:		**52 %**
Building Value:		**$ 206,500**

OWNER INFORMATION

MORGAN, WILLIAM & KIMBERLY

137 MASON HILL ROAD

WARNER, NH 03278

SALES HISTORY

Date	Book	Page	Type	Price	Grantor

PICTURE

LISTING HISTORY

09/27/24 KOVL

NOTES

EXTRA FEATURES VALUATION

Feature Type	Units	Lngth x Width	Size Adj	Rate	Cond	Market Value	Notes

MUNICIPAL SOFTWARE BY AVITAR

WARNER ASSESSING OFFICE

PARCEL TOTAL TAXABLE VALUE

Year	Building	Features	Land
2024	$ 0	$ 0	$ 2,790
		Parcel Total:	$ 2,790
2025	$ 0	$ 0	$ 3,648
		Parcel Total:	$ 3,648
2026	**$ 0**	**$ 0**	**$ 3,662**
		Parcel Total:	**$ 3,662**

LAND VALUATION

LAST REVALUATION: 2025

Zone: R3 - LOW DENSITY **Minimum Acreage:** 3.00 **Minimum Frontage:** 250 **Site:** UND WDS **Driveway:** UNDEVELOPED **Road:** GRAVEL/DIRT

Land Type	Units	Base Rate	NC	Adj	Site	Road	DWay	Topography	Cond	Ad Valorem	SPI	R	Tax Value	Notes
UNMNGD HARDWD	3.000 ac	162,000	F	110	70	95	90	85 -- MODERATE	90	81,600	100	N	314	BBL
UNMNGD HARDWD	9.000 ac	x 2,500	X	91				85 -- MODERATE	100	17,400	100	N	943	
UNMNGD PINE	12.000 ac	x 2,500	X	91				85 -- MODERATE	100	23,200	100	N	2,405	
FRAZIER BROOK IN CU	10.000 wf	NATURAL, MAIN BODY						95 -- MILD	90	20,500	0		0	BBL
	24.000 ac									142,700			**3,662**	

PICTURE

OWNER

MORGAN, WILLIAM & KIMBERLY

137 MASON HILL ROAD

WARNER, NH 03278

TAXABLE DISTRICTS

District	Percentage

PERMITS

Date	Permit ID	Permit Type	Notes

BUILDING DETAILS

Model:
Roof:
Ext:
Int:
Floor:
Heat:
Bedrooms: Baths: Fixtures:
Extra Kitchens: Fireplaces:
A/C: Generators:
Quality:
Com. Wall:
Stories:

Base Type:

BUILDING SUB AREA DETAILS

2025 BASE YEAR BUILDING VALUATION

Year Built:
Condition For Age: %
Physical:
Functional:
Economic:
Temporary:

%